# Astor Roman Tub Set with Low Spout and Hex Cross Handles

JACLO
Confidence from start to finish.™

## Model #: 6970-T686-TRIM-

### FEATURES:

- All brass roman deck mount tub set trim
- Quick connect/disconnect spout
- Stationary spout with full flow aerator
- Spout Hole Size Min-Max: 1 $^{1}/_{8}$" - 1 $^{3}/_{4}$"
- Valve Hole Size Min-Max: 1 $^{1}/_{4}$" - 1 $^{3}/_{8}$"
- Both standard metal & porcelain buttons are included for handles
- Requires J-6912 rough in kit

### AVAILABLE FINISHES:

| | | |
|---|---|---|
| Polished Chrome (PCH) | Satin Chrome (SC) | Bronze Umber (BU) |
| Satin Nickel (SN) | Pewter (PEW) | Caramel Bronze (CB) |
| Polished Nickel (PN) | Antique Brass (AB) | Antique Copper (ACU) |
| Oil-Rubbed Bronze (ORB) | Polished Brass (PB) | Polished Copper (PCU) |
| Vintage Bronze (VB) | Satin Brass (SB) | Rose Gold (RG) |
| Matte Black (MBK) | Satin Gold (SG) | Polished Gold (PG) |
| Black Nickel (BKN) | Bombay Gold (BG) | Jewelers Gold (JG) |
| Europa Bronze (EB) | White (WH) | Sedona Beige (SDB) |
| Tristan Brass (TB) | Satin Cooper (SCU) | |

### SPECIFICATION DRAWING:

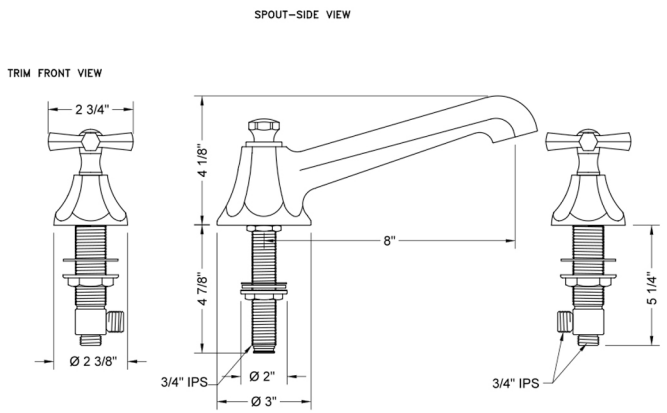


*** SPEC SHOWN WITH ROUGH KIT**
*SOLD SEPARATELY*

### AVAILABLE HANDLES:

T684 T685 T686 T688