CONTEMPORARY™

POT FILLER

- Modern, simple culinary design
- Ceramic disc valves
- Two-piece adjustable arm folds out of the way when not in use
- Spout extends 22"
- Designed for cold water attachment
- Single hole wall mount and single control actuator
- Lead Free - faucet contains ≤ 0.25% total lead content by weighted volume
- 3.0 GPM (11.4L/min) flow rate at 45 psi

CODES AND STANDARDS
Meets or Exceeds ASME A112.18.1/
CSA B125.1/NSF 61/Section 9

Certified Compliant with 0.25% Weighted Average Lead Content Regulations

AVAILABLE FINISHES	FINISH CODE	DESCRIPTION	PRODUCT NUMBER
Polished Chrome	100	Contemporary Pot Filler	D35401900.XXX
Ultra Steel	355		

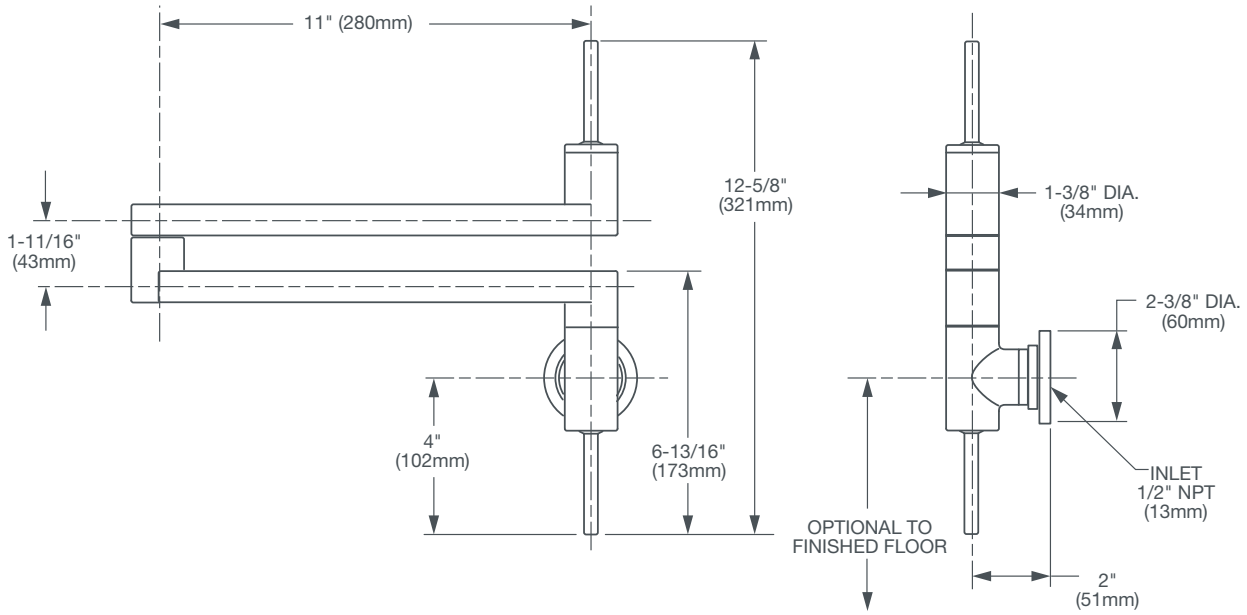

IMPORTANT: These measurements are subject to change or cancellation. No responsibility is assumed for use of superseded or voided pages.

Meets the Americans with Disabilities Act Guidelines and ANSI A117.1 Requirements for the physically challenged.

©2014 AS America Inc.