aquabrass

volare straight 61026

4 hole bidet set

FEATURES

Solid brass construction
4 hole bidet set
Incorportated vacuum braker
Vertical spray
Aerated water flow
Mechanical drain # ABDR42300
Ceramic cartridge # hot ABCA30911 cold ABCA3921
1/2" connection

FINISHES

Standard
polished chrome (pc)
brushed nickel (bn)
tiger bronze (tt)
Custom
18 custom finishes available
(ask your local Aquabrass authorized dealer for details)

SPECS AT LARGE

Total plate height: 4 11/16"

Flow rate: full flow
Mounting hole: 1 3/8"
Counter depth: 1 3/8"

WARRANTY

Residential: Limited lifetime warranty to original purchaser
Commercial: Two years warranty
(Complete warranty available at www.aquabrass.com/warranty)

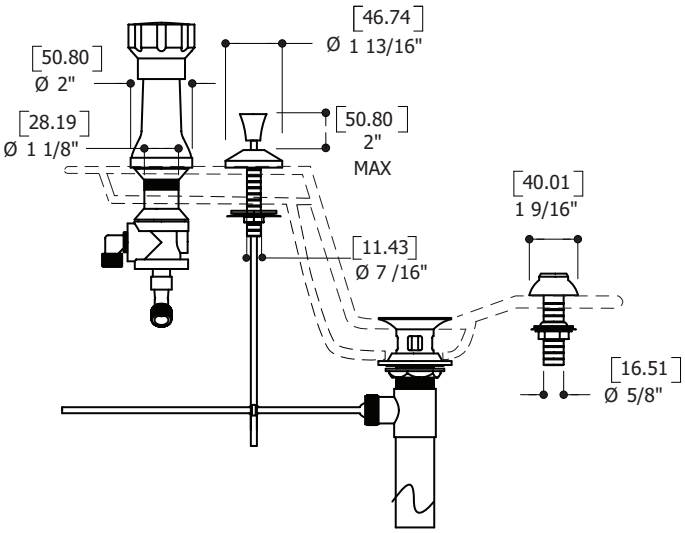

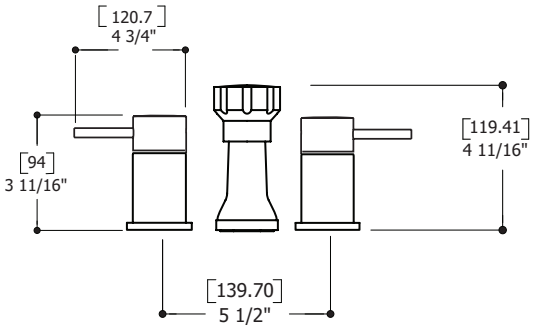

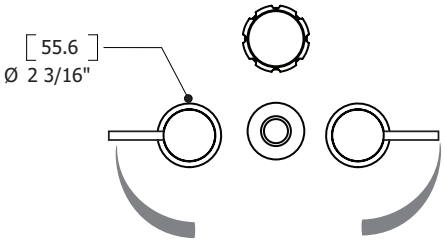

Products and specifications shown are subject to change without notice. Please contact our technical support at tech@aquabrass.com for any further queries, replacement parts requests etc.